Drawing no.	order no.	Description	*
BA1B	17739	Outer Barrel	
BA2	17740	Inner Barrel - 208mm	*
BA3	17741	Barrel Nut	
BA4-D	70068	Flash Hider with M11x1 thread	
BO1	70045	Upper Receiver - L	FDE
BO10	17761	Selector Gear - L	
BO11	17762	Selector Gear - R	
BO12	17763	Selector Spring	
BO13	17764	Set screw M3x4 DIN916	
BO14	17765	Bolt Catch Lever	
BO15	17747	Hop-Up Push-Spring	
BO16-2	70181	Mag Release for ATEK	
BO17	17767	Mag Release Pin ø3,5x30	
BO18	17768	Mag Release Spring	
BO19	17769	Disassembly Pin	
BO2	70051	Upper Receiver - R	FDE
BO20	17770	Sling hook, Scorpion EVO 3 - A1	
BO21	17771	Charging Handle	
BO21-1	17772	Charging H-Spring	
BO22	17773	Charging handle pin	
BO23	17774	Dummy Bolt	
BO24-1	17775	Dummy bolt spring	
BO24-2	17776	Dummy spring guide	
BO25	17777	Bolt M4x35 DIN912	
BO26	17778	Bolt M4x12 DIN912	
BO27	17779	Bolt M4x25 DIN912	
BO28	17780	Nut M4x4	
BO3	70047	Lower Receiver	FDE
BO30	17781	Bolt M3x6 ISO7380-1	
BO31	18578	Bolt M3x6,8 mm	
BO33	70093	Slanted grip	FDE
BO34	19339	Magwell Hicap Shell (L)	
BO34-1	19534	Magwell Hicap Shell (R)	
BO35	70094	Magwell Midcap Shell (L)	FDE
BO35-1	70096	Magwell Midcap Shell (R)	FDE
BO36	19357	Nut M3x4	
BO37	19358	Bolt M4x30 DIN912	
BO38	19359	Bolt M3x16 DIN912	
BO4-2	70090	Front set (L)	FDE
BO4-3	70091	Front set (R)	FDE

Drawing no.	order no.	Description	*
BO5	70048	Grip	FDE
BO6	17757	Grip Cap	
BO7	17758	Motor Adjusting Bolt	
BO8	17759	Selector Lever - L	
BO9	17760	Selector Lever - R	
G1	19230	Gearbox Shell - Left	
G2	19231	Gearbox Shell - Right	
G3	17706	Selector Plate - L	
G4	17707	Selector Plate - R	
G5	17708	Transfer gear - L	
G6	17709	Transfer gear - R	
G7	17710	Trigger	
G8-1	18576	Spring guide - Standard Steel Version	
G10-A	17714	Oilless Bushing 8 mm	*
G11	17715	Shims 3x6x0,5 mm	*
G11	18048	Shims 3x6x0,3 mm	*
G12	17716	Gear - Sector	*
G13	17717	Gear - Spur	*
G14	17718	Gear - Bevel	*
GCA	19221	Cylinder/piston unit (G15 to G18)	*
G15		Cylinder	
G16		Cylinder head	
G17		Piston	
G18		Piston head	
G19	17723	Tappet Plate V3	
G20	17724	Nozzle	
G21	17725	Main Spring M95	*
G22	17727	Tappet Spring	
G23	17728	Trigger Spring	
G24	17729	Bolt M2x3 DIN967H	
G25	17730	Bolt M3x16 DIN7991	
G26	17731	Bolt M3x8 DIN7991	
G27	19354	Gearbox Plate	
G29	17734	Bolt M3x5 ISO7380-1	
G30,G31,G32	17819	motor "U-Basic" - short axle	
GE1-1	19497	EC Unit - AEG	
HU1	17743	Hop-Up Chamber	
HU2	17744	Hop-Up Lever	
HU3	17745	Hop-Up Roler	
HU4	17746	Hop-Up C-Clip	
HU5	17747	Hop-Up Push-Spring	
HU6	17748	Hop-Up Pin	
HU7	17749	Hop-Up Rubber	*
HU8	17750	Hop-Up Roll	*

Drawing no.	order no.	Description	*
HU9	17751	Hop-Up Ring	
M1	17792	Magazin Body - Black	
M10	17802	Magazine Spring Support	
M11	17803	Bottom Cap	
M12	17804	Pin ø2x21	
M2	17793	Magazine Shell - L	
M3	17794	Magazine Shell - R	
M4-1	17795	Follower 1	
M4-2	17796	Follower 2	
M5	17797	Status Lever 1	
M6	17798	Status Lever 2	
M7	17799	BB Jaw	
M8	17800	Jaw Spring	
M9	17801	Magazine Spring	
S1	17782	Stock Base	
S10	17791	Pin ø4x54	
S11	18327	Stock Shoulder	
S2	70049	Stock Body	FDE
S3A	18324	Stock extender	
S4	18325	Stock Release Lever	
S5	17786	Stock Lock. Lever Spring	
S6	17787	Locking Button Pin ø6x16	
S7	18326	Stock Button	
S8	17789	Locking Button Spring	
S9	17790	Pin ø3x24	

19605 (colour: Flat Dark Earth-Dual Tone)

EVO-ATEK

Rev5

Rev.4 / Date: 25-06-2025

Property of ActionSportGames / ASG

EVO-ATEK

005A

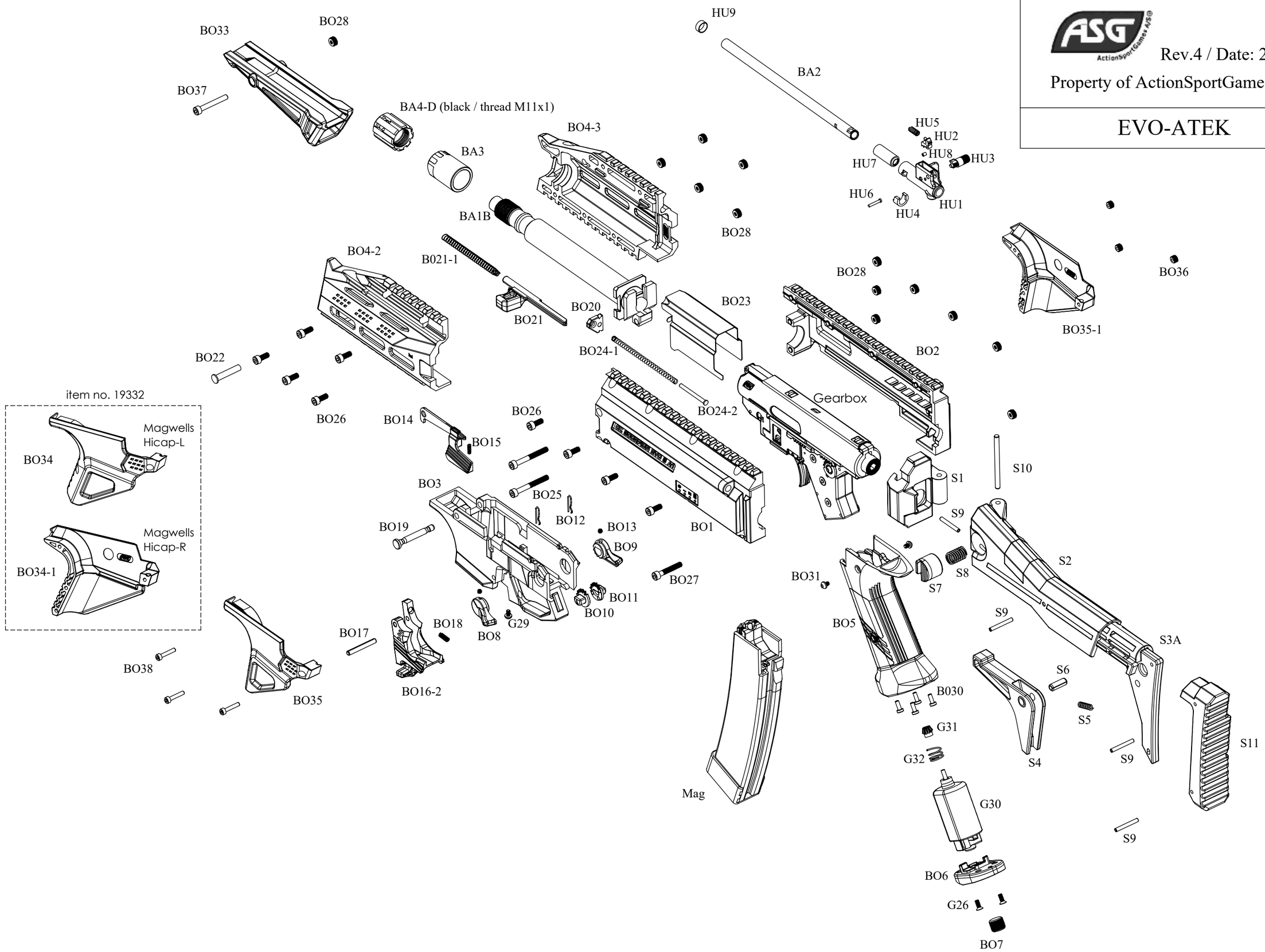

Rev.5 / Date: 31-03-2022

Property of ActionSportGames / ASG

EVO-AEG Gearbox
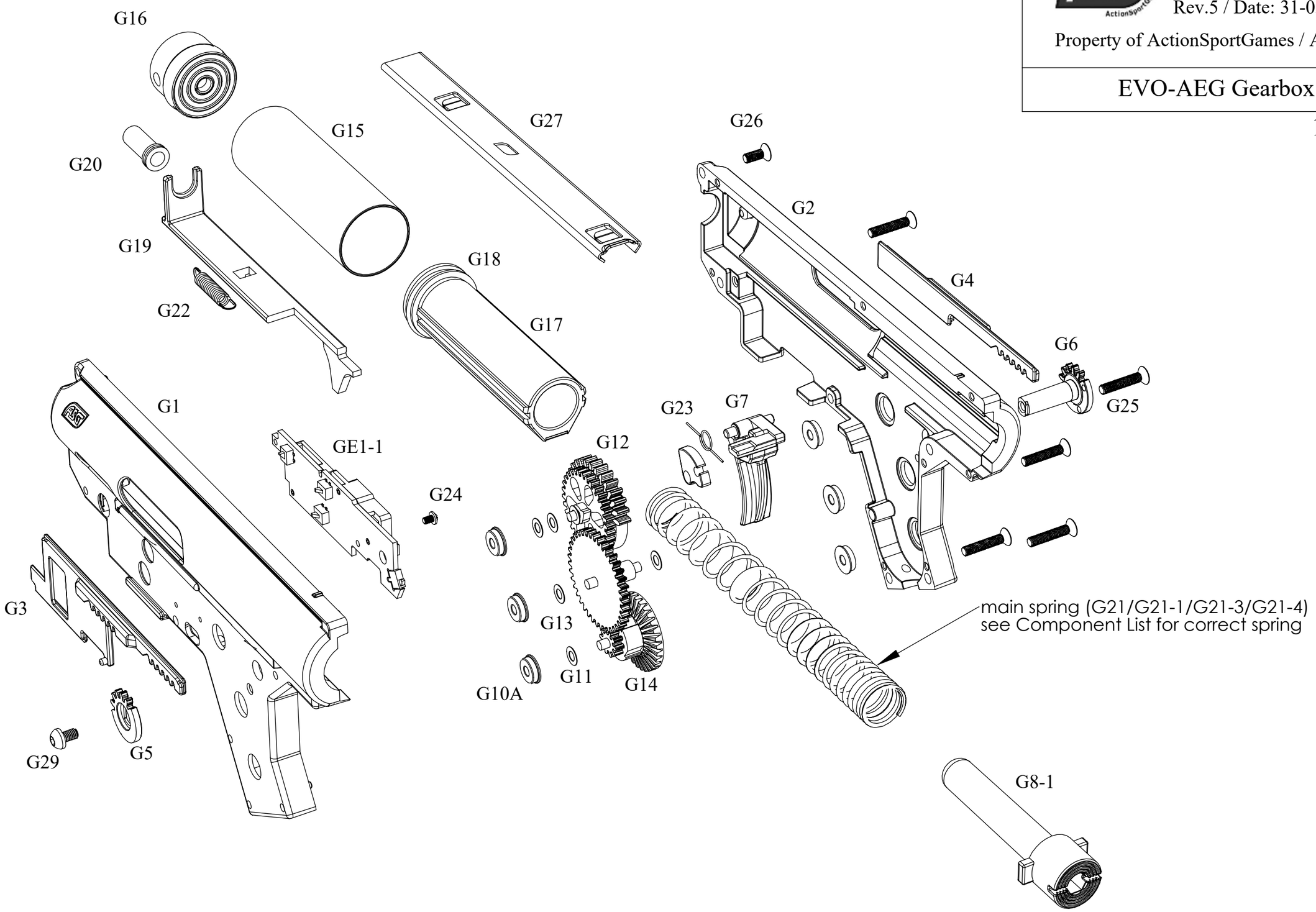
17820