15072 CA 249 Paratrooper

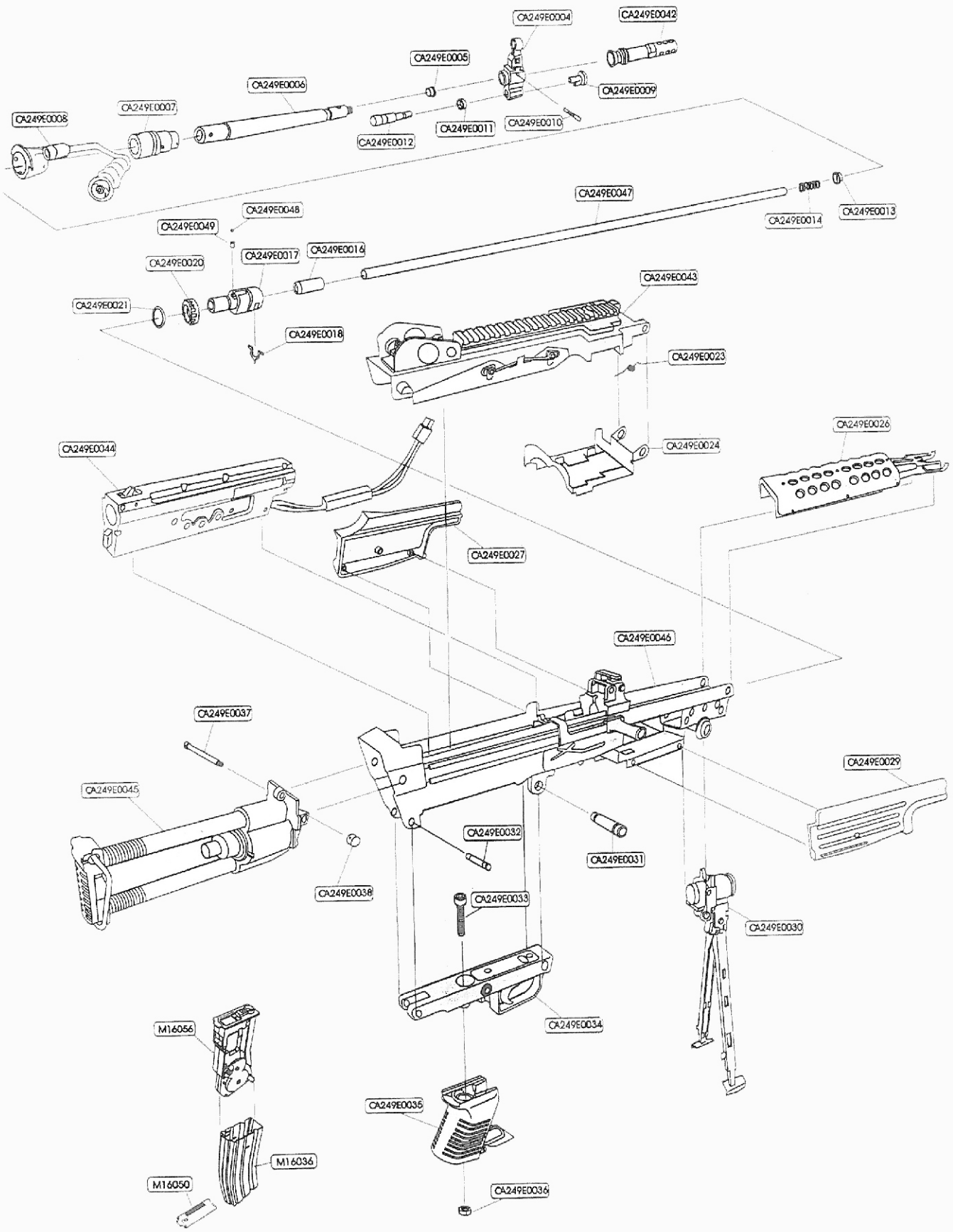

ActionSportGames A/S
Bakkegaardsvej 304
DK-3050 Humlebaek
Denmark

Phone: +45 8928 1888
Fax: +45 4919 3160
sales@actionsportgames.com

actionsportgames.com